FACULTY OF MECHANICAL ENGINEERING CTU IN PRAGUE

DEPARTMENT OF ENVIRONMENTAL ENGINEERING

Environmental Engineering

5. Duct design

Bachelor degree course

Vladimír Zmrhal

Winter semester 10/2021

Laminar and turbulent flows

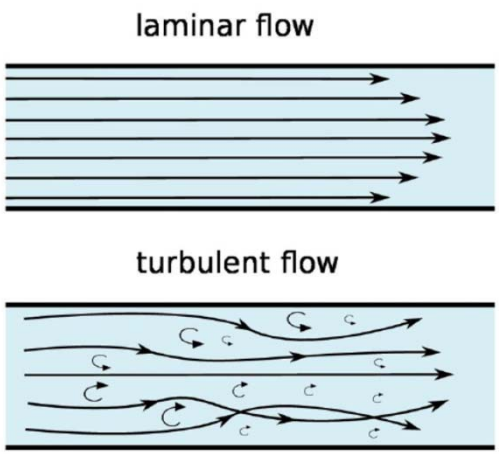

Laminar and turbulent flows

Reynolds number

$$\boxed{\mathrm{Re} = \frac{wd}{\nu}}$$

➢ the ratio of inertial forces to viscous forces within a fluid

In duct where *d* is diameter:

- ➢ laminar flow $Re \leq 2300$
- ➢ transitional flow $2300 < Re < 10000$
- ➢ fully turbulent flow $Re > 10\,000$

ν_{air}… kinematic viscosity [m^2/s] = 14.5 x 10^{-6} [m^2/s] …of air

Laminar and turbulent flows

Flow characteristics

$$\frac{w}{w_{max}} = \left(1 - \frac{y}{r}\right)^{1/n}$$

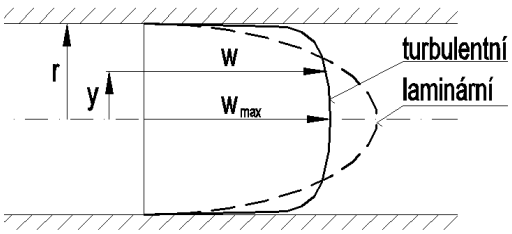

$$V = w_s A$$

$$w_s = \frac{1}{\pi r^2}\int_S w dA$$

$$w_s = \frac{1}{\pi r^2}\int_S w_{max}\left(1 - \frac{y}{r}\right)^{1/n} 2\pi y dy$$

n …exponent f(Re)

$$\boxed{\frac{w_s}{w_{max}} = 0.817}$$

Pressure losses

Bernoulli equation

$$p_{s1} + h_1 \rho g + \frac{\rho}{2} w_1^2 = p_{s2} + h_2 \rho g + \frac{\rho}{2} w_2^2 + \Delta p$$

Pressures in the duct

$$p = p_s + p_d = p + \frac{\rho}{2} w^2$$

$$\boxed{\Delta p = \left(p_{s1} + \frac{\rho}{2} w_1^2 \right) - \left(p_{s2} + \frac{\rho}{2} w_2^2 \right) = p_{t1} - p_{t2}}$$

Pressure losses

- by friction
- local pressure losses

$$\Delta p = \underbrace{\lambda \frac{l}{d} \frac{w^2}{2} \rho}_{\text{by friction}} + \underbrace{\sum \zeta \frac{w^2}{2} \rho}_{\text{local}} = R.l + Z \qquad \lambda = 4f$$

$$\boxed{\Delta p = \left(\lambda \frac{l}{d} + \sum \zeta \right) \frac{w^2}{2} \rho}$$

Note:
Darcy-Weisbach λ
Fanning friction factor f

Friction losses

Laminar flow

$$\lambda = \frac{64}{\mathrm{Re}}$$

Turbulent flow

$$\frac{1}{\sqrt{\lambda}} = -2\log\left(\frac{\varepsilon / d}{3{,}71} + \frac{2{,}51}{\mathrm{Re}\sqrt{\lambda}}\right)$$

Colebrook (1939)
ε/d – relative roughness

$$\lambda = \frac{0{,}0812}{\mathrm{Re}^{0{,}125}\, d^{0{,}11}}$$

Smolik (1959) for $\varepsilon = 0{,}15$

Friction losses

Turbulent flow

$$\lambda = \frac{0.3164}{\sqrt[4]{\mathrm{Re}}}$$

for smooth pipes and duct (plastic)
$2300 < Re < 10^5$

Blasius equation

Friction losses

Roghness height of the conduit wall surfaces

Material	ε (mm)
Galvanized steel	0.15
Concrete duct – smooth surface	0.5
Concrete duct – rough surface	1.0 – 3.0
Smooth brass, copper	0.015
Flexible duct - hose pipe	0.6 - 3
Plastic pipe	0.007

Friction losses

Hydraulic diameter

$$d_h = \frac{4A}{O} = \frac{4ab}{2(a+b)} = \frac{2ab}{a+b}$$

Rectangular ducts

$$\lambda = C\lambda_d$$

$$C = 1.1 - 0.1\frac{b}{a}$$

Moody's diagram

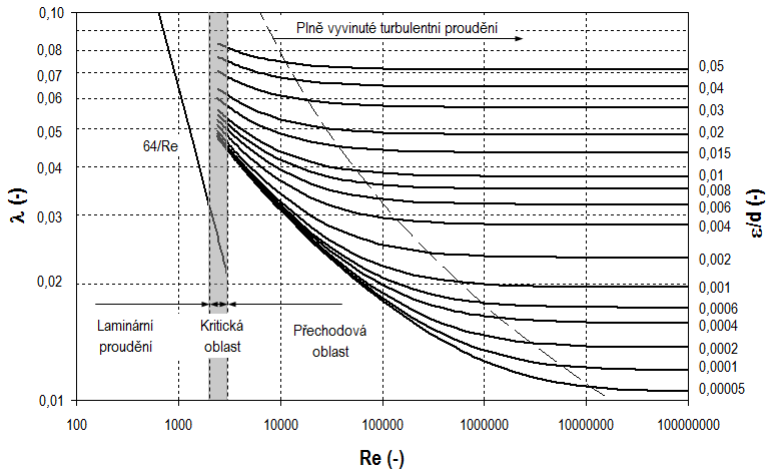

Local pressure losses

Local pressure losses are caused by the fluid flow through the duct fittings:

- which change the direction of the flow (elbows, bands, etc.)
- affect the flow in the straight duct with constant cross-section (valves, stopcocks, filters etc.).

$$\Delta p_l = \sum \zeta p_d = \sum \zeta \frac{w^2}{2} \rho$$

- ζ ... local loss coefficient (experiments - see Idelchik 1986)
- Borda loss prediction

Local pressure losses

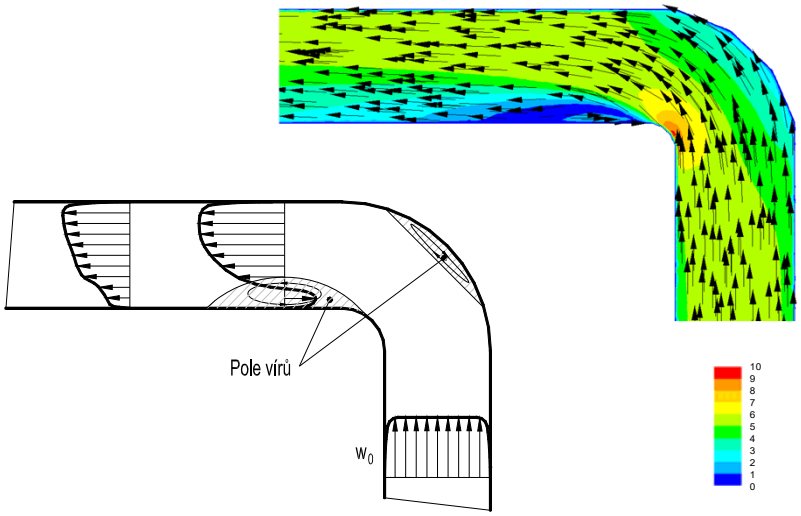

Local pressure losses

Example:

$$\zeta = 1.11\left(\frac{a}{b}\right)^{-0.08}$$

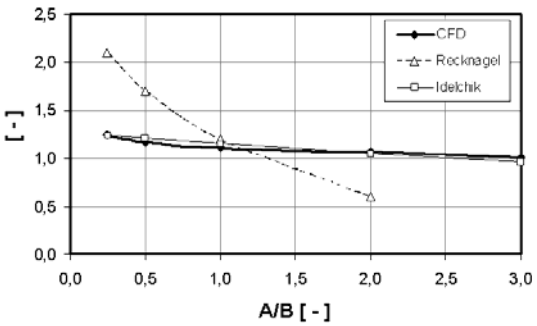

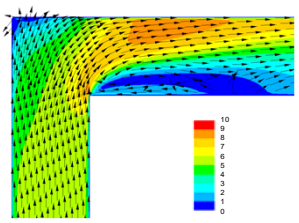

Borda-Carnot equation

- local pressure loss by expansion

$$\Delta p = \zeta \frac{w_1^{\,2}}{2}\rho = \left(1 - \frac{A_1}{A_2}\right)^2 \frac{w_1^{\,2}}{2}\rho$$

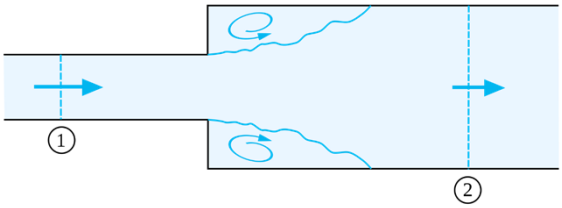

Duct design

Methods

- velocity method ...!
- equal-friction method
- ~~static regain method~~

Velocity method

Duct design procedure:

1) Find the main line

Rule no. 1: the main line is the maximum pressure loss line (longest line, most segment line (?))

2) Air flow rate *V* (m^3/h) in duct sections is known

3) Selection of the air velocity in the duct *w*

Rule no. 2: Air velocity increase towards the fan

Velocity method

	Air velocity *w* (m/s)			
	Main section		Side section	
Ventilation and low-pressure air-conditioning	recomend.	max.	recomend.	max.
- residential buildings	3.5 - 5	6	3	5
- public buildings	5 – 7	8	3 – 4.5	6.5
- industry	6 - 9	11	4 - 5	9
High-pressure air-conditioning	8 - 12	15 - 20	8 - 10	18

Velocity method

4) duct area A (m^2) $\rightarrow$ diameter d or a x b

$$d = \sqrt{\frac{4V}{\pi w}}$$

$\rightarrow$ nominal diameter d_N or a_N x b_N

Rule no. 3: Duct sizes: 80, 100, 125, 140, 160, 180, 200, 250, 315, 355, 400, 450, 500, 560, 630, 710, 800, 900, 1000, 1120, 1250, 1400, 1600, 1800, 2000

Velocity method

5) $d_N \rightarrow$ real velocity w_{real}

$$w_{real} = \frac{4V}{\pi d_N^2}$$

6) calculation of dynamic pressure p_d

7) Reynolds number $\rightarrow$ friction coefficient λ

8) local loss coefficients ζ

9) pressure loss of the duct section $\Delta p_{z,i}$

$$\Delta p_i = \left(\lambda \frac{l_i}{d_{N,i}} + \sum \zeta \right) \frac{w_i^{\,2}}{2} \rho$$

Velocity method

Rule no. 4: Balancing

$$\Delta p_F + \Delta p_E = \Delta p_G + \Delta p_I$$

10) total pressure loss is the sum of the duct sections pressure losses

$$\Delta p_{ext} = \sum \Delta p_i$$

Velocity method

Main line

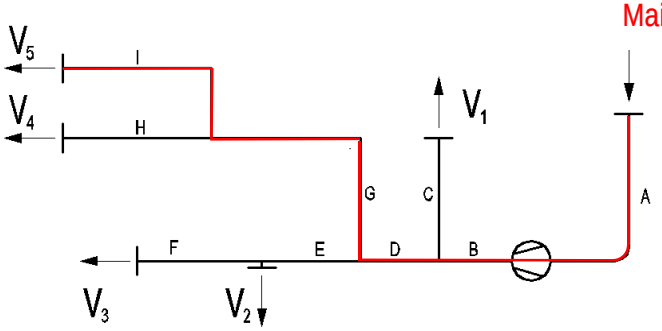

$$\Delta p = \Delta p_A + \Delta p_B + \Delta p_D + \Delta p_G + \Delta p_I$$

$$\dot{V} = \dot{V}_1 + \dot{V}_2 + \dot{V}_3 + \dot{V}_4 + \dot{V}_5$$

Fan and ductwork

Duct pressure loss

$$\Delta p = \underbrace{\lambda \frac{l}{d}\frac{w^2}{2}\rho}_{friction} + \underbrace{\sum \zeta \frac{w^2}{2}\rho}_{local} = \left(\lambda \frac{l}{d} + \sum \zeta\right)\underbrace{\frac{w^2}{2}\rho}_{p_d}$$

$$\Delta p = \left(\lambda \frac{l}{d} + \sum \zeta\right)\left(\frac{V}{A}\right)^2 \frac{\rho}{2} = \left(\lambda \frac{l}{d} + \sum \zeta\right)\left(\frac{4V}{\pi d^2}\right)^2 \frac{\rho}{2} = KV^2$$

$$K = \left(\lambda \frac{l}{d} + \sum \zeta\right)\frac{8\rho}{\pi^2 d^4}$$

... parabolic relation

Fan and ductwork

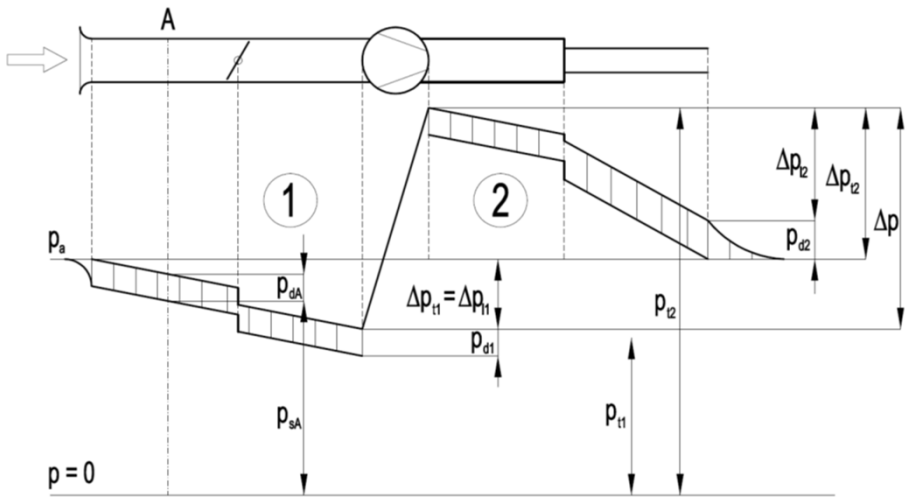

Fan and ductwork

- dynamic pressure

$$p_d = \frac{w^2}{2}\rho \qquad w = \frac{V}{S} = \frac{4V}{\pi d^2}$$

- total pressure

$$p_t = p_s + p_d$$

- total pressure difference across the fan

$$\Delta p = p_{t2} - p_{t1} = \Delta p_{t1} + \Delta p_{t2} = \Delta p_{l1} + \Delta p_{l2} + p_{d2}$$

Fan and ductwork

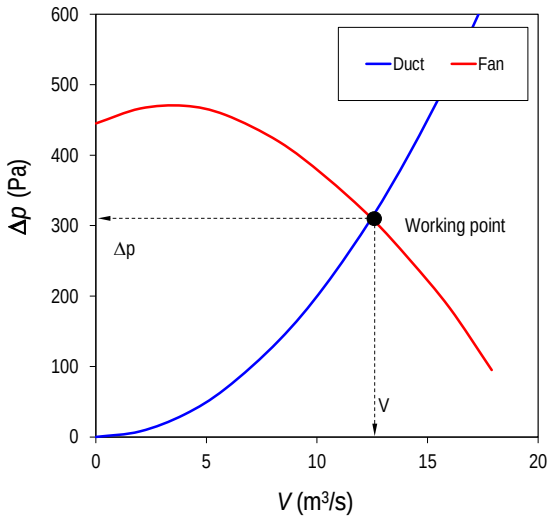

Fan

Volume airflow rate V [m³/s]

- volume of air, which is transferred by fan
- performance data are based on dry air at standard conditions 101,325 kPa and 20 °C → ρ = 1,2 kg/m³

Total pressure difference Δp [Pa]

- the fan have to pass the system pressure losses (static pressure)

Electric power P [W]

$$P = \frac{\dot{V}\Delta p}{\eta_{tot}}$$

Fan

Specific fan power SFP [W/(m³/s)]

$$SFP = \frac{P}{\dot{V}} = \frac{\Delta p}{\eta_{tot}}$$

Energy consumption [kWh]

$$E_{tot} = \int_0^{\tau} P d\tau = \sum_0^n P$$

[kWh/year]

τ … working time of the fan [hours/year]

Fan laws

n = var.; ρ = const.	ρ = var.; n = const
$V_2 = V_1 \frac{n_2}{n_1}$	$V_2 = V_1$
$\Delta p_2 = \Delta p_1 \left(\frac{n_2}{n_1}\right)^2$	$\Delta p_2 = \Delta p_1 \frac{\rho_2}{\rho_1}$
$P_2 = P_1 \left(\frac{n_2}{n_1}\right)^3$	$P_2 = P_1 \frac{\rho_2}{\rho_1}$

Duct systems

Shapes

- rectangular
- round
- flexible duct

Materials

- steel galvanized
- aluminium
- plastic PVC
- textile
- ALP

Duct systems

Duct leakage rate

$$V = m\Delta p^{0,67} S_v$$

where S_v … duct surface [m^2]

Class	Charakteristics of the leakage path *m* [m^3/s per m^2]
A	0.027 x 10^{-3}
B	0.009 x 10^{-3}
C	0.003 x 10^{-3}
D	0.001 x 10^{-3}

Thermal insulation

Purpose

- condensation risk
- heat losses/gains

Thickness of TI

- indoor 45 – 60 mm
- outdoor 80 – 100 mm (with sheet covering)

Example

Example 1: Dimension the air duct system. Use the velocity method.

air velocity w = 6 - 10 m/s,

air density ρ = 1.2 kg/m^3,

kinematic viscosity ν = 14.5 x 10^{-6} m^2/s

V_1 = 9 000 m^3/h

V_2 = 1 440 m^3/h

V_3 = 2 160 m^3/h

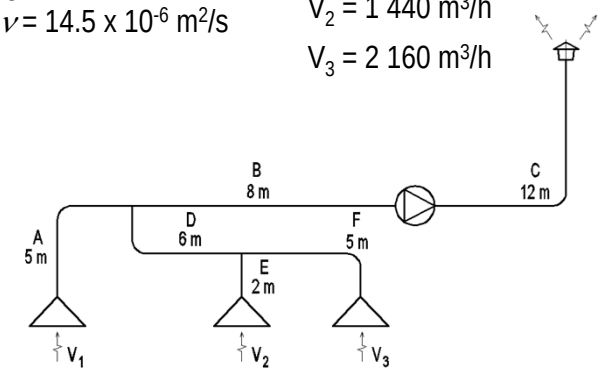

Example

Example 1:

$$D_{calc} = \sqrt{\frac{4V}{\pi w}} \quad \Rightarrow \quad D_N \quad \Rightarrow \quad w_{real} = \frac{4V}{\pi D_N^2}$$

$$\Rightarrow \quad \mathrm{Re} = \frac{w_{realt} D_N}{\nu} \quad \Rightarrow \quad \lambda = \frac{0.0812}{\mathrm{Re}^{0.125} D_N^{\,0.11}}$$

$$\Delta p_f = \lambda \frac{l}{D} \frac{w_{real}^{\,2}}{2} \rho \qquad \Delta p_l = \sum \zeta \frac{w_{real}^{\,2}}{2} \rho$$

$$\Delta p_i = \Delta p_f + \Delta p_l (+\Delta p_{el})$$

Example

Line	l	V	V	w_{calc}	D_{calc}	D_N	w_{real}	p_d	Re	l	Δp_f	$\Sigma\zeta$	Δp_l	Δp_{el}	Δp_t
-	m	m³/h	m³/s	m/s	mm	mm	m/s	Pa	-	-	Pa	-	Pa	Pa	Pa
												0,41		19	
												0,96		0	
												0,46		0	
												2,04		0	
TOTAL															XX

FAKULTA STROJNÍ ČVUT V PRAZE

ÚSTAV TECHNIKY PROSTŘEDÍ

Thank you for your attention

utp.fs.cvut.cz